IMPORTER / IMPORTED BY:
SIGNAL MEBLE
UL. KILIŃSKIEGO
27-400 OSTROWIE
POLAND
WYPRODUKOWANO W CHINACH / MADE IN CHINA

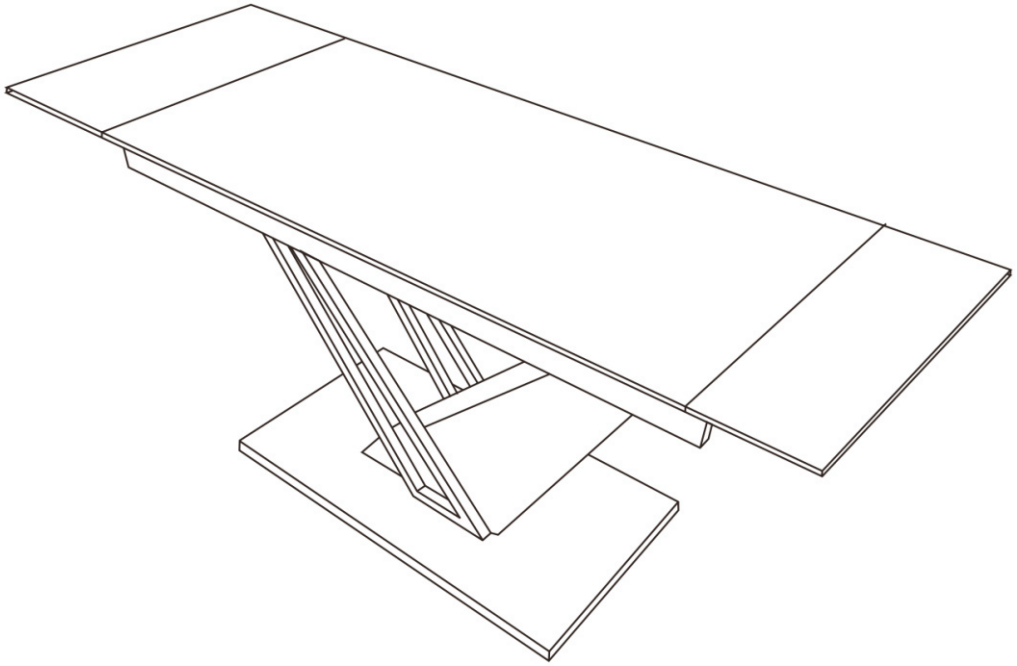

| | | | | |
|---|---|---|---|---|
| 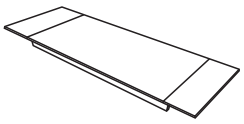 ①x1 | 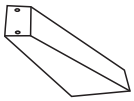 ②x1 | 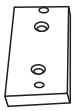 ③x1 | 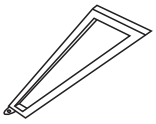 ④x2 | 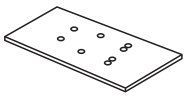 ⑤x1 |
|  Ax12 |  M8x35mm Bx4 |  Cx1 |  M8x20mm Dx8 |  M8x25mm Ex8 |
|  |  | | | |

## STEP1

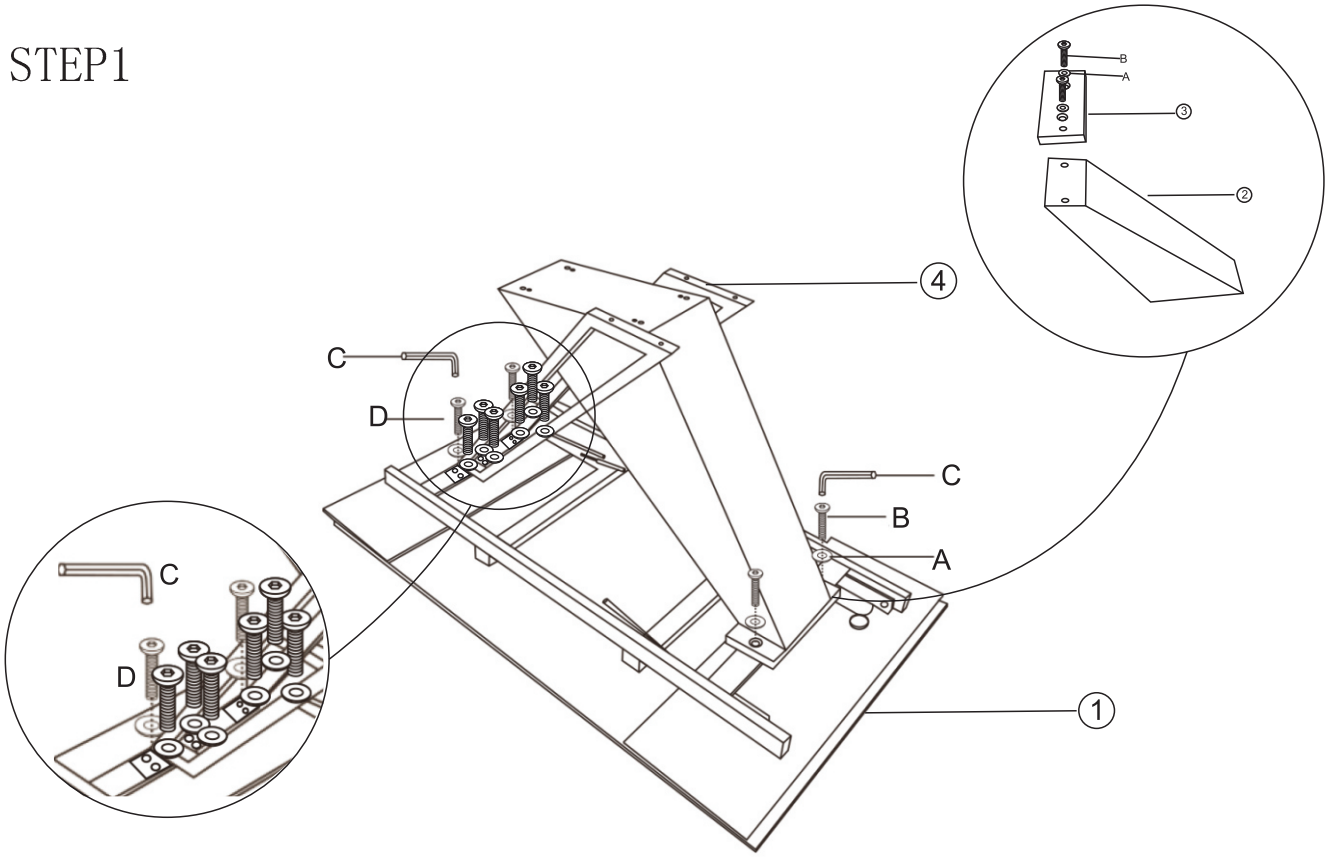


## STEP2

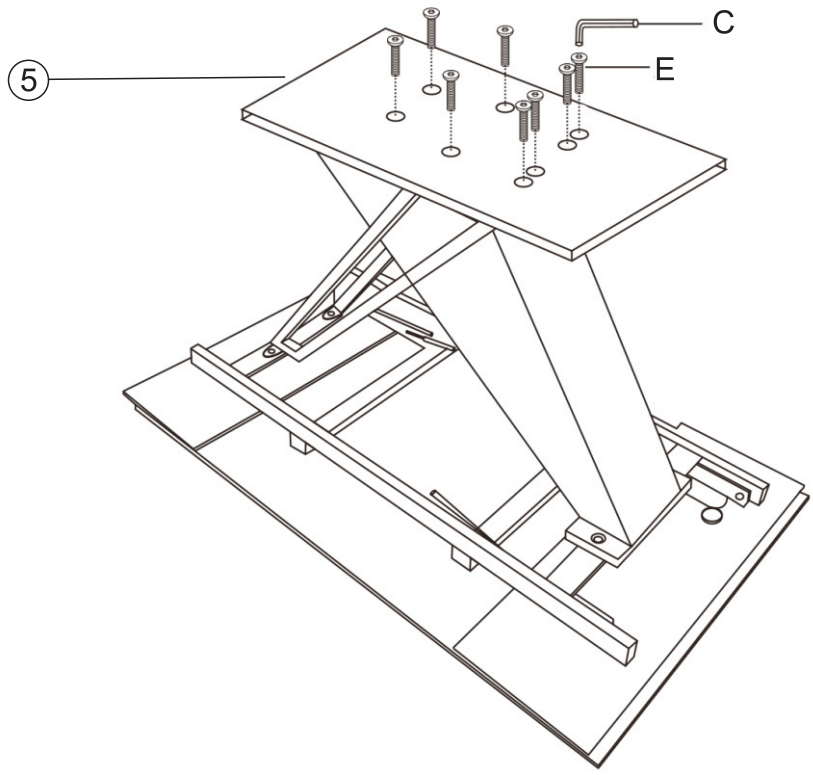

STEP3

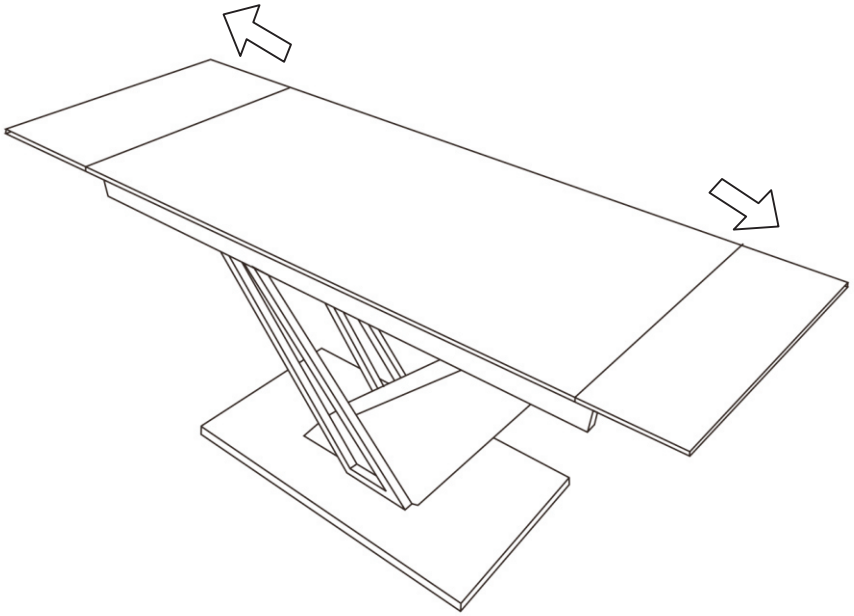

STEP4

